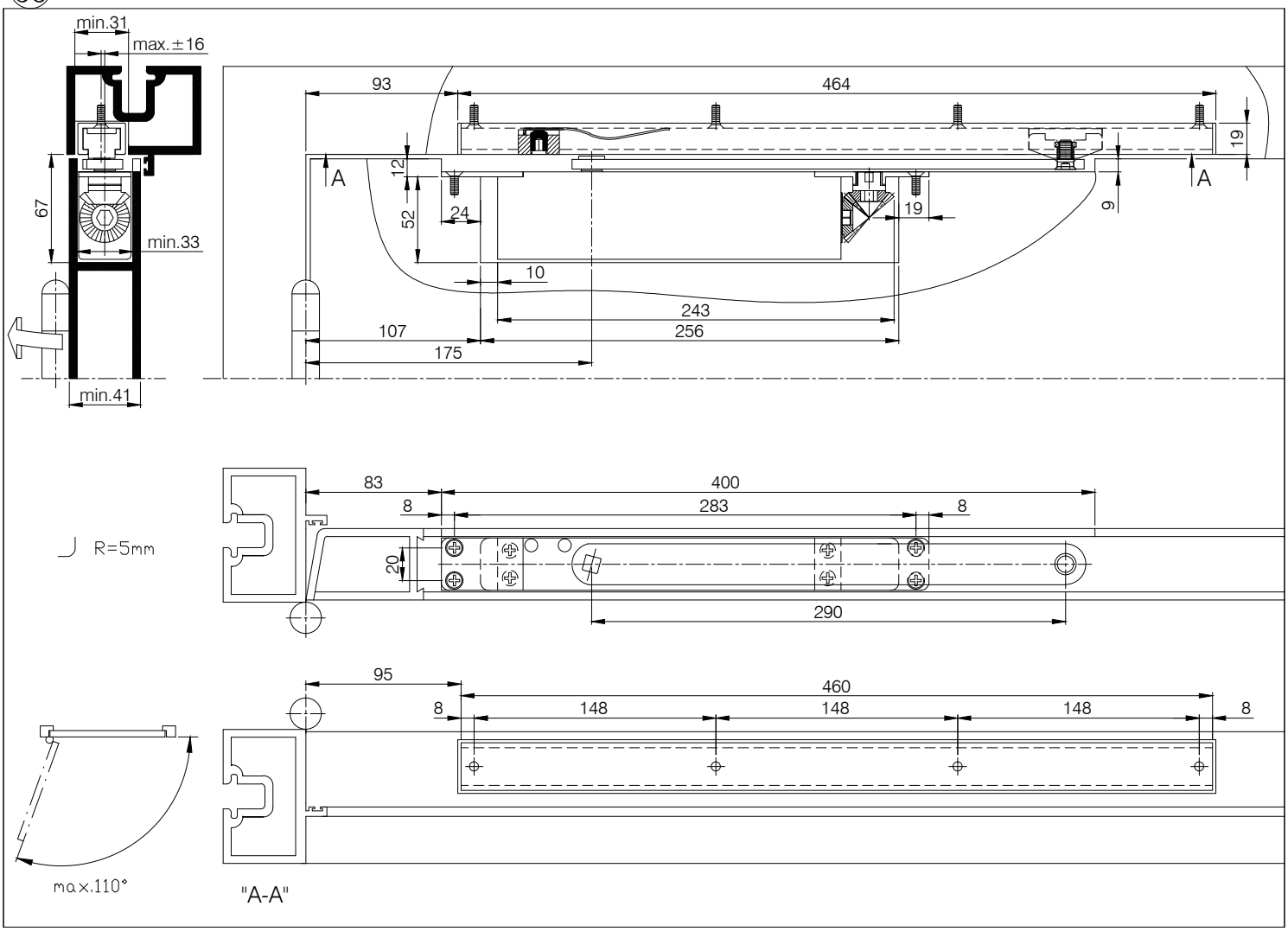
min.31
max.±16
67
min.33
min.41
93
464
19
12
52
24
19
9
A
A
10
243
107
256
175
83
400
8
283
8
R=5mm
20
290
95
460
8
148
148
148
8
max.110°
"A-A"

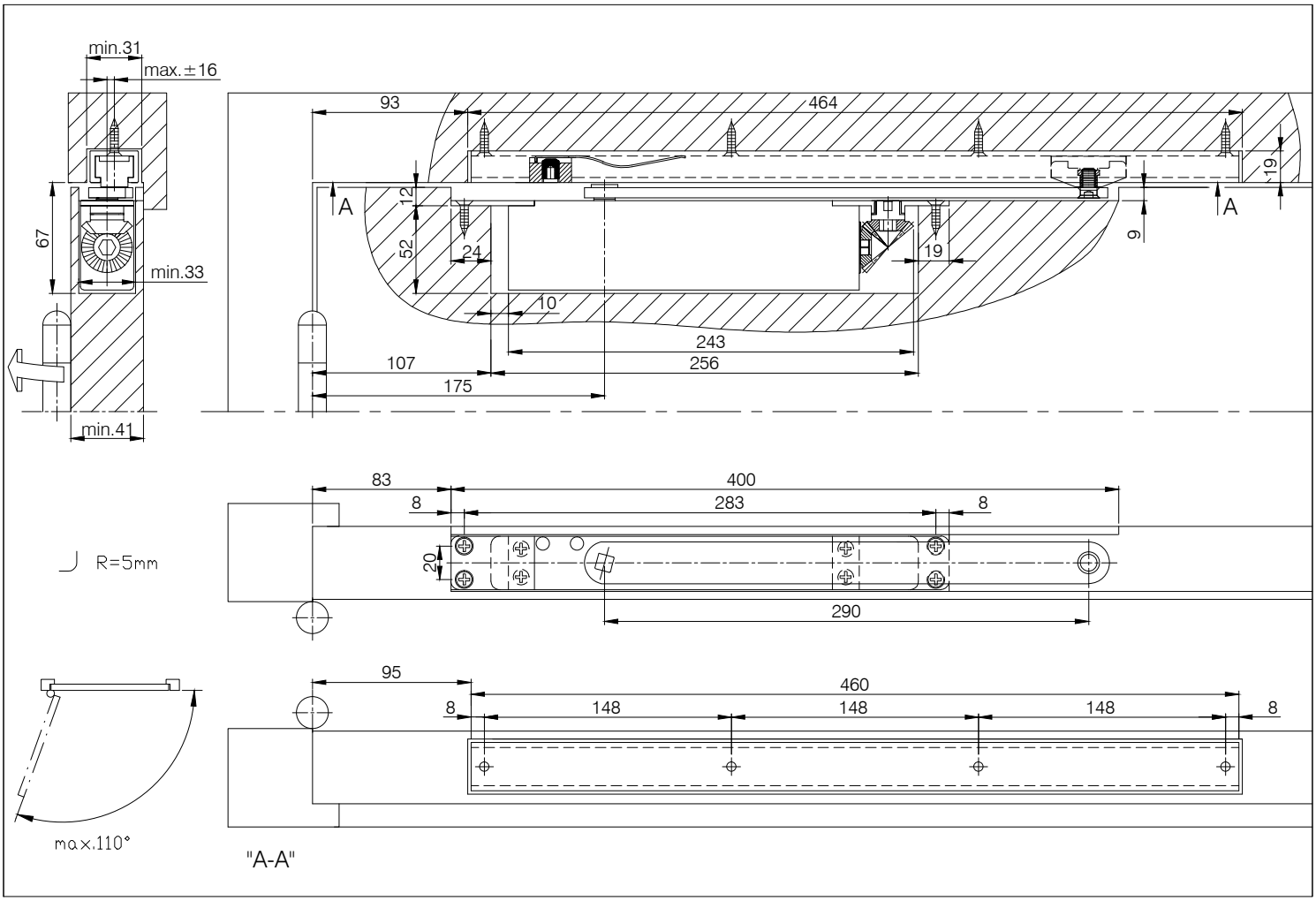
min.31
max.±16
67
min.33
min.41
93
464
19
12
52
24
19
9
A
A
10
243
107
256
175
83
400
8
283
8
R=5mm
20
290
95
460
8
148
148
148
8
max.110°
"A-A"

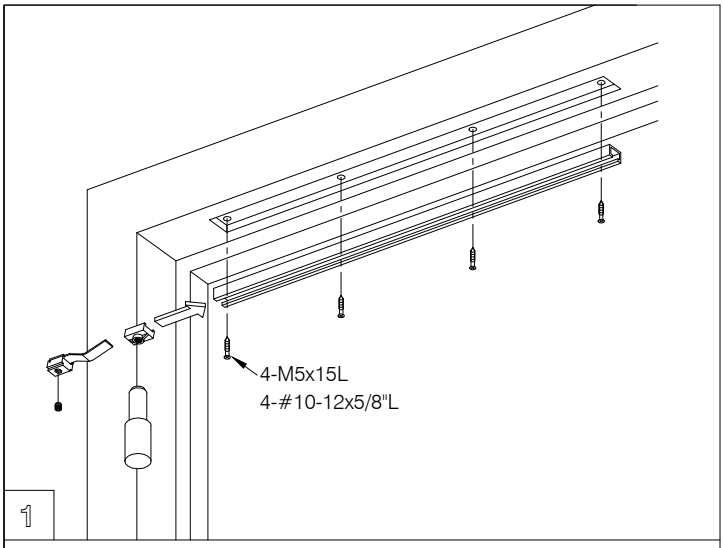
4-M5x15L
4-#10-12x5/8"L
1

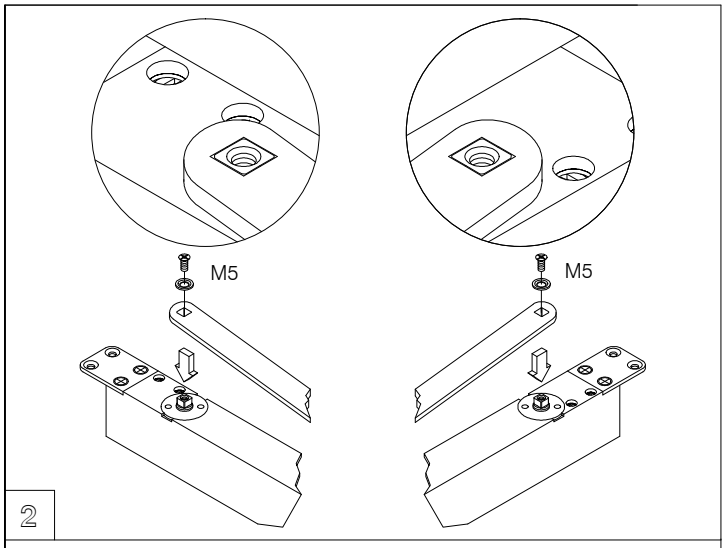
M5
M5
2

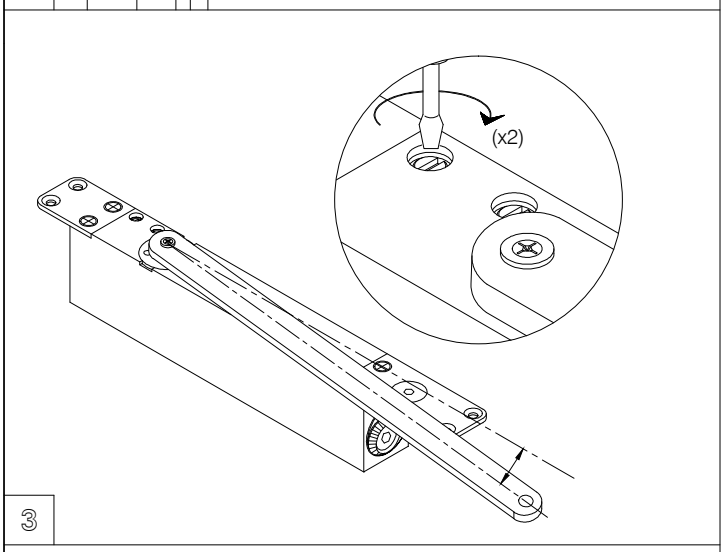
(x2)
3

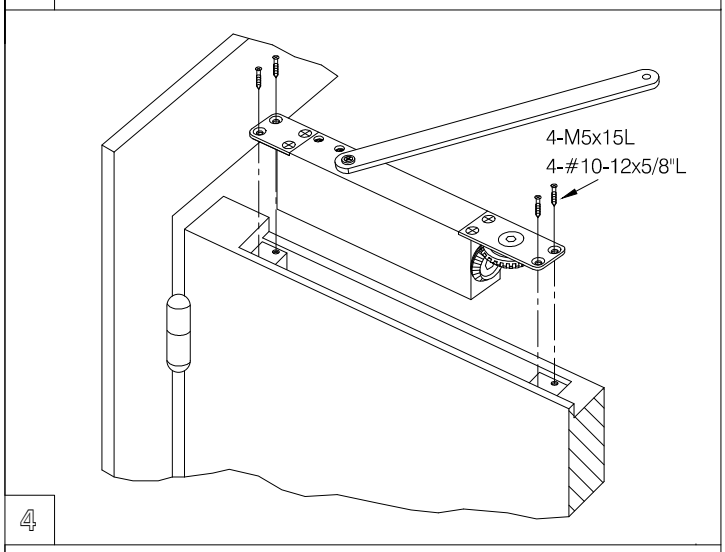
4-M5x15L
4-#10-12x5/8"L
4

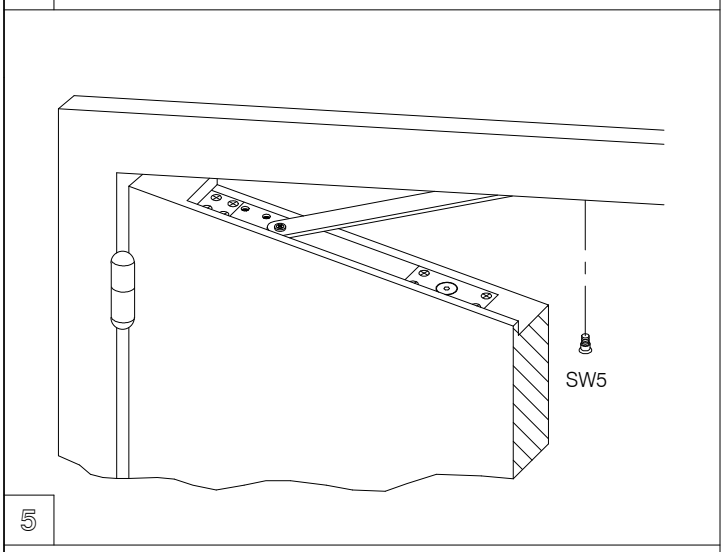
SW5
5

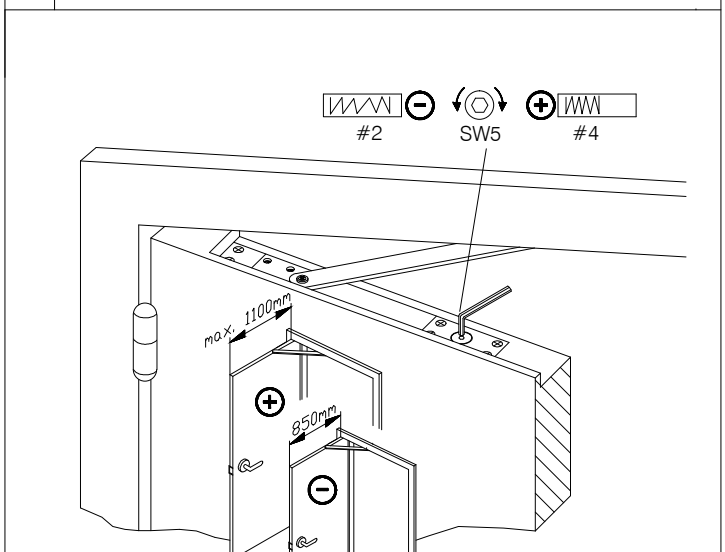
#2
SW5
#4
max. 1100mm
850mm
Power adjustment
2-4 MODEL
NO. OF TURNS | DIRECTION | SIZE
4 | - | 2
0 | * | 3
6 | + | 4
* : FACTORY PRE-SET
7

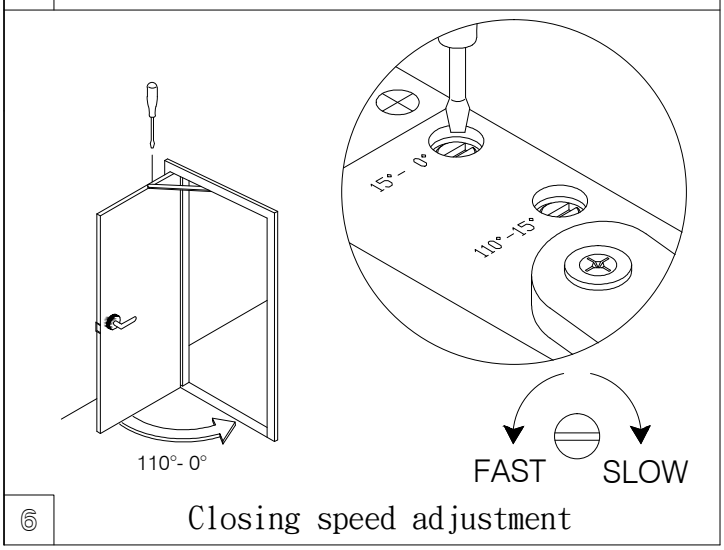
15° - 0°
110°-15°
110°- 0°
FAST
SLOW
6
Closing speed adjustment